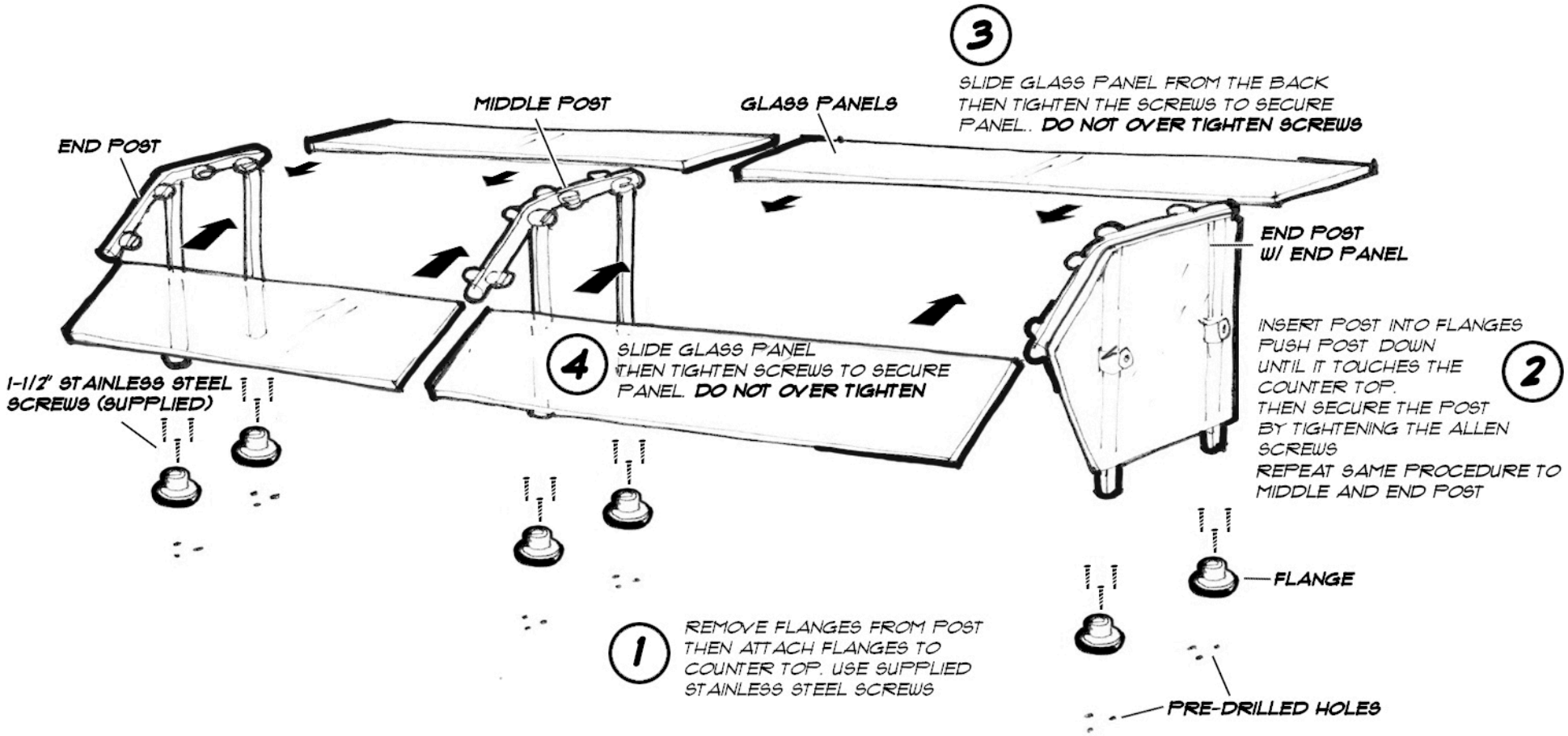

SNEEZE GUARD INSTALLATION GUIDE